MOSES SOPs for Exposure Chambers

UNIVERSITY OF NORTH CAROLINA AT CHAPEL HILL

MOSES Standard Operating Procedure (SOP)
SOP #71- Exposure Chamber and Ozone Analyzer Calibration (UNC)

TITLE: LA75 Exposure Chamber and Ozone Analyzers Calibration **Version:** 1.0

Directory/file[a]: //Shared on 'CEMALB/MOSES/ SOP_UNC_Chamber & O3 cal.doxc

Author: J. Berntsen, TRC/M. Hazucha, UNC

Signature: **Date**: February 13, 2012

Revised by: **New version[b]:** **Date:**

Revisions/additions:

Signature:

Revised by: **New version[b]:** **Date:**

Revisions/additions:

Signature:

Revised by: **New version[b]:** **Date:**

Revisions/additions:

Signature:

ANNUAL REVIEW[c]

Signature	**Date**

SOP UPDATED TO VERSION [d]

Explanations: [a] Incorporate the version of SOP into the file name, e.g., Ind_sputum_v10_sop.

[b] If the revision is minor the version number is increased by 0.1, i.e., to 1.1. <u>If the revision is major, do not overwrite the old document but create a new one with the updated file name and a new cover sheet with the new version number, i.e., 2.0. You must keep the old version on the server in SOPS directory and in your files!</u>

[c] Annual review does not change the version of the SOP.

[d] Change the version # as necessary.

EXPOSURE CHAMBER AND OZONE ANALYZER CALIBRATION (UNC)

1. SCOPE AND APPLICATION

The purpose of this standard operating procedure is to provide description and operation of the EPA's Human Studies Facility exposure chamber (LA75) and instructions for calibrating O_3 analyzers used to monitor O_3 concentration in the exposure chamber to be used for the MOSES study. The exposures to ozone via inhalation are conducted in a stainless-steel chamber with continuous conditioning of the chamber air through high-efficiency particle filters. Ozone is generated by exposure of USP oxygen to a silent electric arc in an ozone generator. The concentration of the ozone is continuously monitored to ensure that the appropriate concentration is maintained.

2. EXPOSURE CHAMBER SPECIFICATIONS

2.1 Size and construction, including recirculation and/or air exchange rate

The chamber floor is approximately 20 feet by 15 feet with a height of approximately 10 feet at the sides. The chamber walls are made of insulated stainless steel panels normally used for large walk-in refrigerators and freezers with Teflon gaskets between the panels. The air flow rate is 4000 CFM with approximately 40 air changes an hour with no recirculation. All of the duct work for the chamber is made of stainless steel. The floor is made of epoxy-coated perforated floor tiles. The air flow is from the top of the chamber cone, through the chamber, and through the floor and out.

2.2 Chamber supply air, including scrubbing method and efficiency

The outside air for the chamber is filtered, heated or cooled as required, passed through a bed of Purafil (potassium permanganate on an alumina substrate), passed through a bed of Purakol (activated charcoal), dehumidified using a Munters Cargocaire dehumidifier, passed through a bed of Hopcalite heated to approximately 100˚C, cooled to approximately 15˚C and injected into the Clean Air Plenum. The chamber air is drawn from this plenum and then heated or cooled, passed through a HEPA filter, humidified, and then injected into the top of the cone attached to the top of the chamber. The concentrations of ozone, oxides of nitrogen, carbon monoxide, total hydrocarbons, and sulfur dioxide are routinely measured in the Clean Air Plenum. The concentrations of all of these pollutants are near the minimum detectable limit except for the total hydrocarbon concentration, which is approximately 2 ppm methane using methane as the calibration gas. The Hopcalite cannot be heated high enough to burn off the methane; however, the other hydrocarbons are removed from the air stream.

3 OZONE GENERATION METHODOLOGY

3.1 Ozone generator design specifications

Ozone is generated by a Fischer, model 502 ozone generator (Meckenheim/Bonn, Germany later as Innovatec, GmbH, Rheinbach, Germany). The generator uses USP

oxygen grade which passes through a silent electric discharge to generate ozone. The flow of oxygen is controlled by a mass flow controller. The ozone output is controlled by varying the power of the silent electric arc. The ozone is mixed with the air to obtain a desired concentration. The resulting ozone enriched air is then introduced into the environmental chamber to allow exposure via inhalation.

Stainless steel gas plumbing is used to deliver oxygen to the pollutant delivery system on demand. Mass-flow controllers precisely control the amount of oxygen that is supplied to the ozone generator and subsequently mixed with facility makeup air. To ensure that the flow of oxygen is not interrupted, each gas manifold (equipped with a pressure regulator) will automatically change from one bank of cylinders to another. The line pressure, of approximately 50 psig, is monitored by a computer. Deionized water is used to humidify the air.

3.2 Monitoring of chamber concentrations, including injection and monitoring manifold design

The ozone is injected into the center of the main air duct after the heating and cooling coils and the humidifier but before several 90 degree bends and a silencer. The sample manifold starts with a glass funnel pointing down about 8 feet from the floor in the center of the chamber. A 3" glass manifold runs from this funnel to the instrumentation racks. As the glass manifold runs behind the racks, a ¼-inch Teflon line draws a sample from the center of the tube for each of the analyzers. A set of Teflon solenoid valves is used to select the source of the sample for each analyzer.

The concentration of ozone is continuously monitored using UV photometric analyzers (TRC doc. #68-D0-0114-OMM, March 30, 2001). The analyzers are connected to the Analyzer Support System comprising of:

(1) Analyzer Function Support System. This provides vacuum and gas shut-off valves, and potentiometers for the mass-flow controllers; (Figure 3.2.1).

(2) Analyzer Calibration System. This consists of equipment to provide accurate calibration of the gas analyzer; (Figure 3.2.2)

(3) Analyzer Alarm System. Comprises computer software which controls alarms (both sound and visual (light) warnings) and gas shut-off valves.

Figure 3.2.1 Analyzer Support System

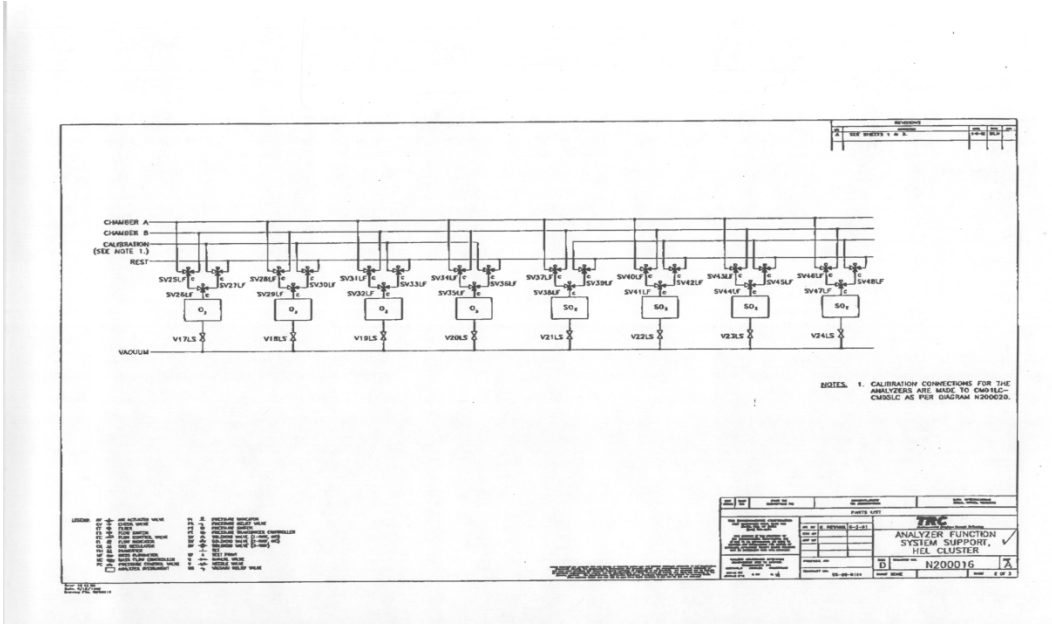

Figure 3.2.2 Analyzer Calibration System

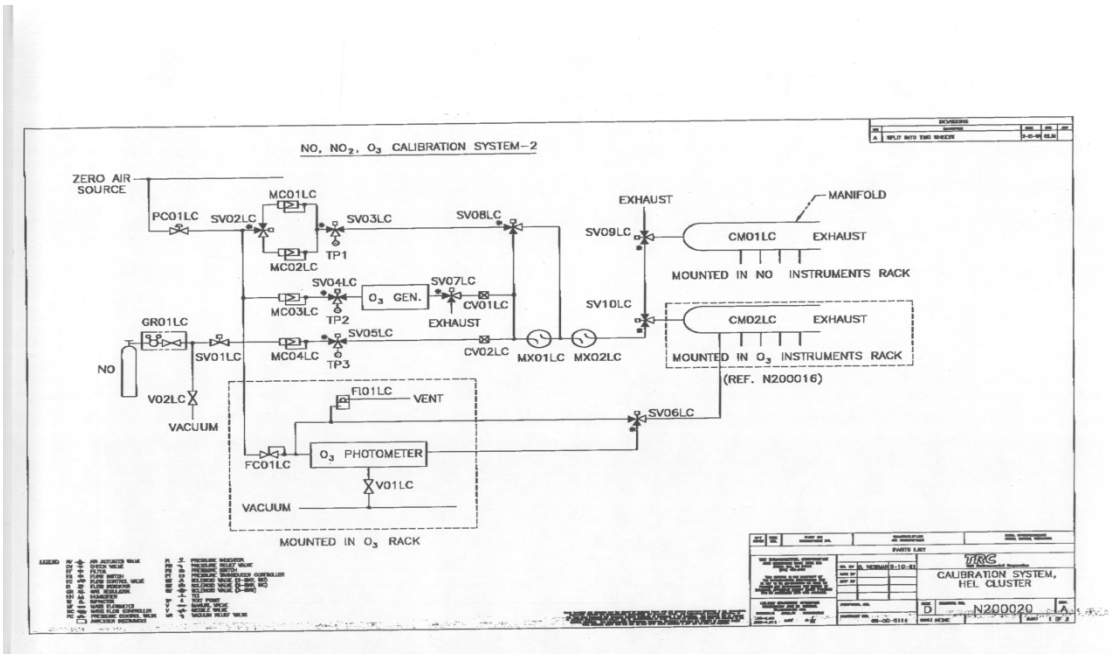

3.3 Control of chamber concentrations, including concentration stability criteria

The ozone concentration in the chamber will be maintained to allow an exposure of 0, 70 and 120 ppb over 3 hours at 22°C ± 1.1°C and 40% RH ± 5% RH. The exposure alarm is configured to warn the operator if concentration deviates by ± 5% or more, and will automatically shut down if the concentration exceeds 10% of the target ozone level.

3.3.1 Analysis Data

Standard descriptive statistics for each challenge period (mean, standard deviation, minimum, maximum, SD) generated from a typical end-of-exposure report of ozone concentration used in a previously completed ozone challenge study with a target ozone concentration of 0.08 ppm is shown in Table 3.3.1. Other descriptive statistics of interest can be generated as well. The tabular values are updated every 2 min. Figure 3.3.1 shows a graph generated to provide a continuous analog ozone concentration over the period of 6 hours.

Table 3.3.1 Example of Statistics from a Typical End of Exposure Report

Avg.	Min.	Max.	SD	Time span
8.0026E-02	7.9391E-02	8.1815E-02	2.5711E-02	8:30 – 14:00

Figure 3.3.1 Example Graph from a Typical End of Exposure Report

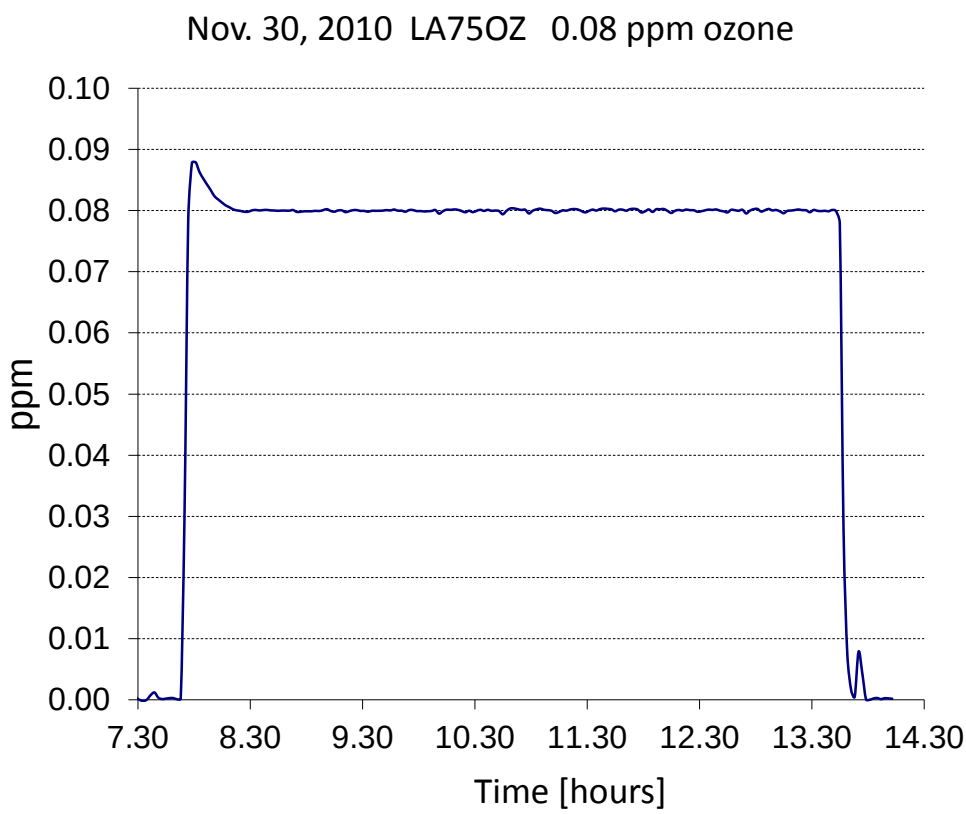

A typical summary report of ozone concentrations used in a previously completed ozone challenge study with a target ozone concentration of 0.08 ppm is provided in Table 3.3.2 for a 7 hour exposure. Similar reports are available for other monitored gases (NO, NO_2, SO_2, CO, and THC), chamber temperature and relative humidity.

Table 3.3.1 Ozone Analysis Data

Date	Ozone Ave (ppm)	Ozone Min (ppm)	Ozone Max (ppm)	Ozone Std (ppm)
3/3/2008	0.080	0.078	0.084	0.001
2/13/2008	0.080	0.078	0.082	0.001
2/13/2008	0.080	0.078	0.082	0.001
3/19/2008	0.080	0.077	0.083	0.001
3/19/2008	0.080	0.077	0.083	0.001
11/17/2008	0.080	0.079	0.080	0.000
12/18/2008	0.080	0.076	0.081	0.001
12/3/2008	0.080	0.079	0.081	0.000
2/5/2009	0.080	0.079	0.081	0.000
12/3/2008	0.080	0.079	0.081	0.000
1/12/2009	0.080	0.077	0.083	0.001
12/1/2008	0.080	0.079	0.080	0.000
11/5/2008	0.080	0.079	0.081	0.000
11/6/2008	0.080	0.079	0.081	0.000
11/6/2008	0.080	0.079	0.082	0.000
1/12/2009	0.080	0.077	0.083	0.001
12/18/2008	0.080	0.076	0.081	0.001
2/2/2009	0.080	0.079	0.081	0.000
1/14/2009	0.080	0.079	0.081	0.000
1/15/2009	0.080	0.079	0.081	0.000
1/15/2009	0.080	0.079	0.081	0.000
2/2/2009	0.080	0.079	0.080	0.000
2/5/2009	0.080	0.079	0.081	0.000
3/9/2009	0.080	0.079	0.081	0.000
2/25/2009	0.080	0.078	0.081	0.000
3/9/2009	0.080	0.079	0.081	0.000
2/25/2009	0.080	0.078	0.081	0.000
3/12/2009	0.080	0.080	0.081	0.000
3/25/2009	0.080	0.079	0.080	0.000
3/12/2009	0.080	0.080	0.081	0.000

4. OZONE MONITORING SPECIFICATIONS AND PROCEDURES

4.1 Analytical method and instrumentation

The concentration of ozone is monitored using a TECO Model 49i and calibrated using a TECO Model 49i converted into a standard photometer and a TECO Model 49iPS

standard photometer used as a transfer standard .Samples are extracted from the exposure chamber using an integral 3” glass sampling manifolds. The entrance to each manifold is located approximately at the center of the exposure chamber. A fan pulls chamber air at a speed of 3 m/sec through each exhaust manifold and analyzers are connected to the manifolds by ¼” Teflon tubing. The UV photometer determines the ozone concentration by measuring the attenuation of light due to ozone in the absorption cell (with a path length of 37.84 cm) at a wavelength of 254 nm. The concentration of ozone is directly related to the magnitude of the attenuation, as shown in Figure 4.1. These UV photometric analyzer models have been designated by the US EPA as an equivalent method for the measurement of ambient concentrations of ozone pursuant with the requirements defined in 40 CFR Part 53. The designated equivalence method is # EQOA-0880-047, and the EPA designation date is August 27, 1980 and amended for the Model 49i October 4, 2005 (TECO model 49i, 49iPS Operation and Service manual, Thermo Electron Corp).

Every ten seconds, each analyzer sends a packet of the data to the computer. Every thirty seconds, the computer checks the required output and adjusts the ozone delivery system to a desired concentration profile. The computer control system checks the status of the operation including out-of-limit conditions each second. The exposure alarm is configured to warn the operator if the concentration deviates by ± 5% or more, and will automatically shut down if the concentration exceeds 10% of the target ozone level.

Figure 4.1. Correlation of the Concentration of Ozone and the Magnitude of the Attenuation

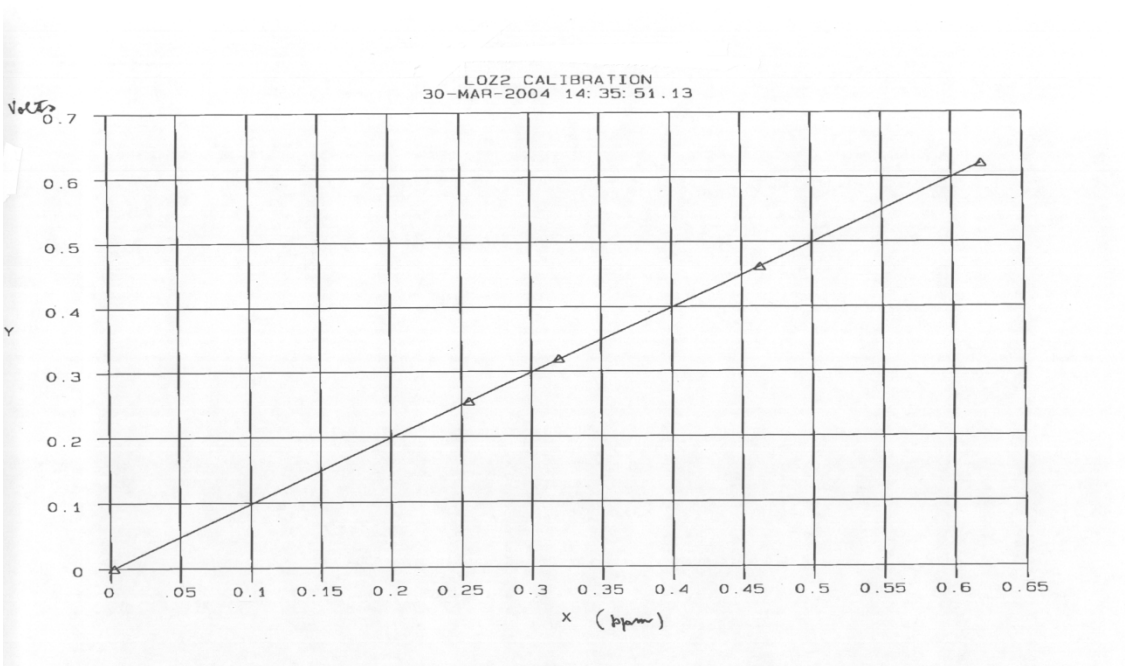

4.1.1 Suitability of Analytical Methods

The UV photometric ozone analyzers used to monitor the chamber atmosphere undergo multipoint calibration the working day before and a day after each exposure. Ozone

calibration gas is generated by irradiating zero air with a UV lamp. The concentration of ozone calibration gas is determined by TECO ozone analyzer 49iPS. The analyzers for a continuous background monitoring of nitrogen oxide, nitrogen dioxide, sulfur oxide, carbon monoxide, total hydrocarbons, temperature, relative humidity and light intensity are calibrated at least biweekly.

4.1.2 Other Pollutants

During O_3 exposures, nitric oxide, nitrogen dioxide, and sulfur dioxide concentrations are typically <0.02, 0.005 and 0.005 ppm, respectively. Other monitored variables are chamber temperature, relative humidity, CO and THC.

4.2 Calibration procedures and calibration standard

The ozone analyzers are automatically calibrated by the computer on operator command and with operator acceptance of the resulting calibrations. The operator requests a calibration by specifying the analyzers to be calibrated and the number of points and the concentration for each of the points (the operator can specify between two and ten points). TRC usually specifies a multipoint calibration with a zero and four upscale points. The highest point is higher than the highest concentration for active protocols. The computer uses the following procedure to calibrate the analyzer.

1. The computer connects all of the requested analyzers to the calibration system and purges the calibration system and analyzers with zero air for two minutes.
2. After the two-minute purge, the computer starts the calibration.
3. The computer uses the first of the operator specified calibration points to calculate the required settings for the calibration system, zero air flow and ozone generator level required for that concentration. The computer also determines the number of analyzers than can be accommodated by the calculated air flow through the calibration manifold.
4. The computer commands the calibration system to generate the concentration for the first of the specified points and to connect the calculated number of analyzers to the calibration manifold including the standard photometer.
5. The computer waits until all of the analyzers have settled including the standard photometer and records each of the analyzer's reading for that point.
6. If all of the analyzers could not be accommodated, the computer disconnects the first batch and connects the second batch of analyzers. The computer then waits until these analyzers have settled and records their readings.
7. The computer then does the same for each of the remaining operator-specified calibration points.
8. When all of the points have been completed, the computer again purges the calibration system and the analyzers for two minutes and returns the analyzers to a rest position.
9. At the end of the calibration, the computer has a table containing the reading of the standard photometer and each of the analyzers being calibrated for each of the operator specified points in the calibration.
10. After the calibration has finished, the operator must verify the calibration for each of the analyzers before the new calibration constants are used by the system and a

calibration report printed. The computer uses a standard linear least squares algorithm to calculate the slope and intercept for each analyzer versus the standard photometer. The computer generates a preliminary report listing the analyzer's reading, the standard photometer reading, the calculated analyzer reading using the slope and intercept, the difference between the calculated and actual analyzer reading, and the percentage difference. The previous slope and intercept and the new slope and intercept. The correlation coefficient of the line and the calculated error at the high value between the old and new calibrations. The computer also indicates if the new slope and intercept values are outside predetermined limits or if the difference between the previous and the new values are too great. The computer also indicates if the correlation coefficient is too low. If the operator accepts the calibration, the computer prints a calibration report and replaces the old calibration constants with the new ones.

The ozone analyzers are calibrated at a minimum of the working day before and the working day after the exposure. However, they are usually calibrated the morning of the exposure and the afternoon after exposure. The calibration standard is another 49i analyzer made into a photometer by removing the ozone scrubber and supplying the same zero air used by the calibration system.

5. CERTIFICATION OF STANDARD AND TRACEABILITY TO AN EPA STANDARD REFERENCE PHOTOMETER

A Thermo Fisher Model 49iPS is used as the transfer standard and is taken to the EPA facility at RTP every six months to be certified against the EPA standard. This unit is then used to certify the Model 49i converted to a standard photometer.

6. PREVENTIVE MAINTENANCE, INCLUDING ADDRESSING MOISTURE ISSUES

Whenever the analyzers are being used, the computer checks both cell lamp intensities, the cell flows, the instrument pressure, the instrument temperature, and all of the supply voltages. Every three months, a technician manually checks the detector frequencies and noise and makes adjustments as required. The technician also checks the analyzer stability by connecting it to the calibration manifold with approximately 0.4 ppm flowing through it and allowing the analyzer to sample for two hours. The technician checks the analyzer rise time and also the changes in analyzer output over the two hours. If the rise time is too long or the analyzer output varies by too much, repairs are made. The technician performs the same checks on the 49iPS at six month intervals.

Every three months, an external auditor checks the chamber distribution, sample manifold loss, and performs an analyzer calibration of one of the four analyzers that can be used to control the chamber concentration. Since three chambers can be controlled by these four analyzers, three analyzers are checked every three months. The rise lag and fall times are also checked for all four analyzers. The sample manifold loss and the chamber distribution must be within 5% and are usually less than that.

One analyzer is always used to control the chamber concentration and usually a second analyzer is used to monitor the chamber concentration. The two analyzer outputs are compared to ensure that they both read approximately the same concentration. This procedure checks for analyzer problems including moisture issues. We will also start checking changes in analyzer outputs when going from dry air in the calibration manifold to humid air in a chamber. In addition, we routinely replace the scrubbers on the ozone analyzers every three years to prevent moisture problems.

7. REFERENCES

Pollutant Control System-Operation and Maintenance Manual, TRC Environment Corp., Document 68-D0-0114-OMM, March 30, 2001.

OM&M Standard Operating Procedure
SOP #HSFPCS-SOP081 Revision 0
July 28, 2013

Cleaning the Stainless Steel Chamber Walls

Approval:
Area Manager: _____
QA Manager: _____
Safety Officer: _____
Program Manager: _____

1.0 Purpose

This SOP provides the procedure required to clean the stainless steel chamber walls.

2.0 Scope

This procedure is applicable to all individuals cleaning stainless steel chamber walls. It should be noted that the steps in this procedure are not exhaustive in nature, but contain a level of detail that only knowledgeable and well-trained technicians can fully understand and be expected to follow completely.

3.0 References

Forms - none

Specific References - none

General - none

4.0 Requirements

The following equipment and materials are required to satisfactorily conduct the procedure in Section 5.0.

- Respirator with organic vapor cartridge
- Dust mop with a 12 inch head with terry cloth cover
- Turpentine
- Lemon oil

- Protective rubber gloves

5.0 Procedure

The following procedures are used to clean the chamber walls.

1. In a well ventilated area, mix a solution of 10% lemon oil and 90% turpentine.

2. While wearing a respirator suitable for organic vapors and with no other people in the area, use a long handled dust mop with a 12 inch head covered with a terry cloth cover slightly wetted with the lemon oil turpentine solution to scrub the outside walls of the chamber. Minimize the amount of the liquid used and the spillage on the floor the antirooms.

3. Clean the inside walls of the chamber in the same manner with the chamber running (with no humidity) and while wearing a respirator.

4. Seal the remainder of the mixture in a container and spread any cloths out to dry in a well ventilated area.

5. After cleaning the inside walls of the chamber, increase the chamber temperature the maximum for that chamber and allow to run for at least four hours.

6. After the 4 hours, cool the chamber down to 72 degrees F and turn the chamber off.

7. Wash the cloths before cleaning the next chamber.

6.0 Follow-up

Fill out the work order and give it to the Area Manager to sign.